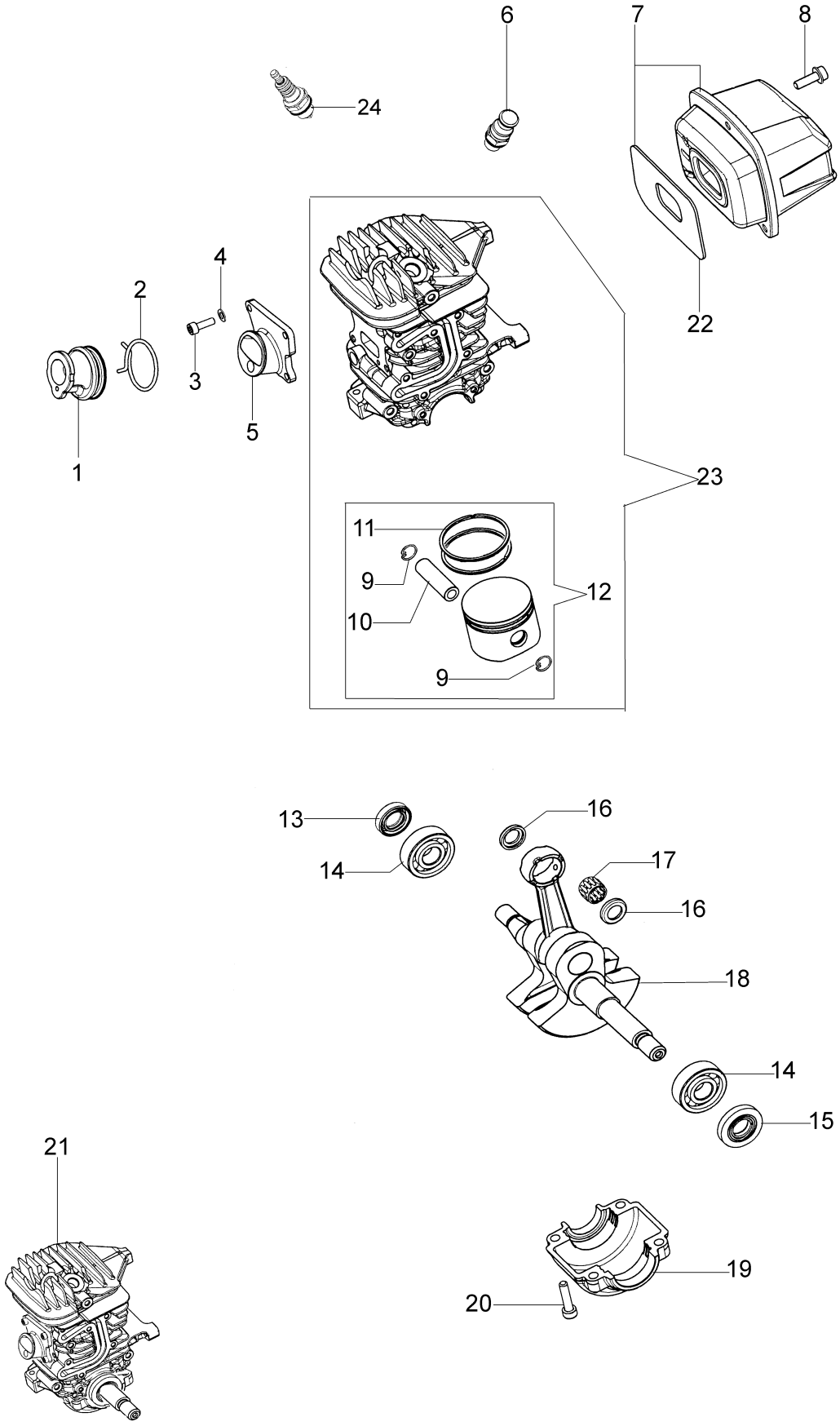
6
7
8
24
4
2
3
5
1
22
23
11
9
10
12
9
13
14
16
17
16
18
14
15
21
19
20

| Ref.Nu | Qty | Part number | Description | Validity from | Validity till | Notes | Bulletin |
|---|---|---|---|---|---|---|---|
| 1 | 1 | 50050010R | Manifold | | | | |
| 2 | 1 | 094600103 | Band | | | | |
| 3 | 4 | 3891010R | Screw | | | | |
| 4 | 4 | 006000315R | Washer | | | | |
| 5 | 1 | 50230060R | Flange | | | | |
| 6 | 1 | 50230012R | Decompressor | | | | |
| 7 | 1 | 50170027R | Muffler | | | | |
| 8 | 3 | 3860117R | Screw | | | | |
| 9 | 2 | 004900061R | Ring | | | | |
| 10 | 1 | 50230011R | Piston pin | | | | |
| 11 | 2 | 50070128R | Piston ring Ø42 | | | | |
| 12 | 1 | 50232010 | Piston assy Ø42 | | | | |
| 13 | 1 | 3050022AR | Seal ring | | | | |
| 14 | 2 | 094000006R | Bearing | | | | |
| 15 | 1 | 3050024AR | Seal ring | | | | |
| 16 | 2 | 50110043AR | Spacer | | | | |
| 17 | 1 | 50110044R | Bearing | | | | |
| 18 | 1 | 50230082R | Crankshaft | | | | |
| 19 | 1 | 50050016AR | Cover | | | | |
| 20 | 4 | 3801047 | Screw | | | | |
| 21 | 1 | 50232020R | Short block | | | | |
| 22 | 1 | 50170031R | Gasket | | | | |
| 23 | 1 | 50232023 | Complete cylinder Ø42 | | | | |
| 24 | 1 | 3055120 | Spark plug | | | | |

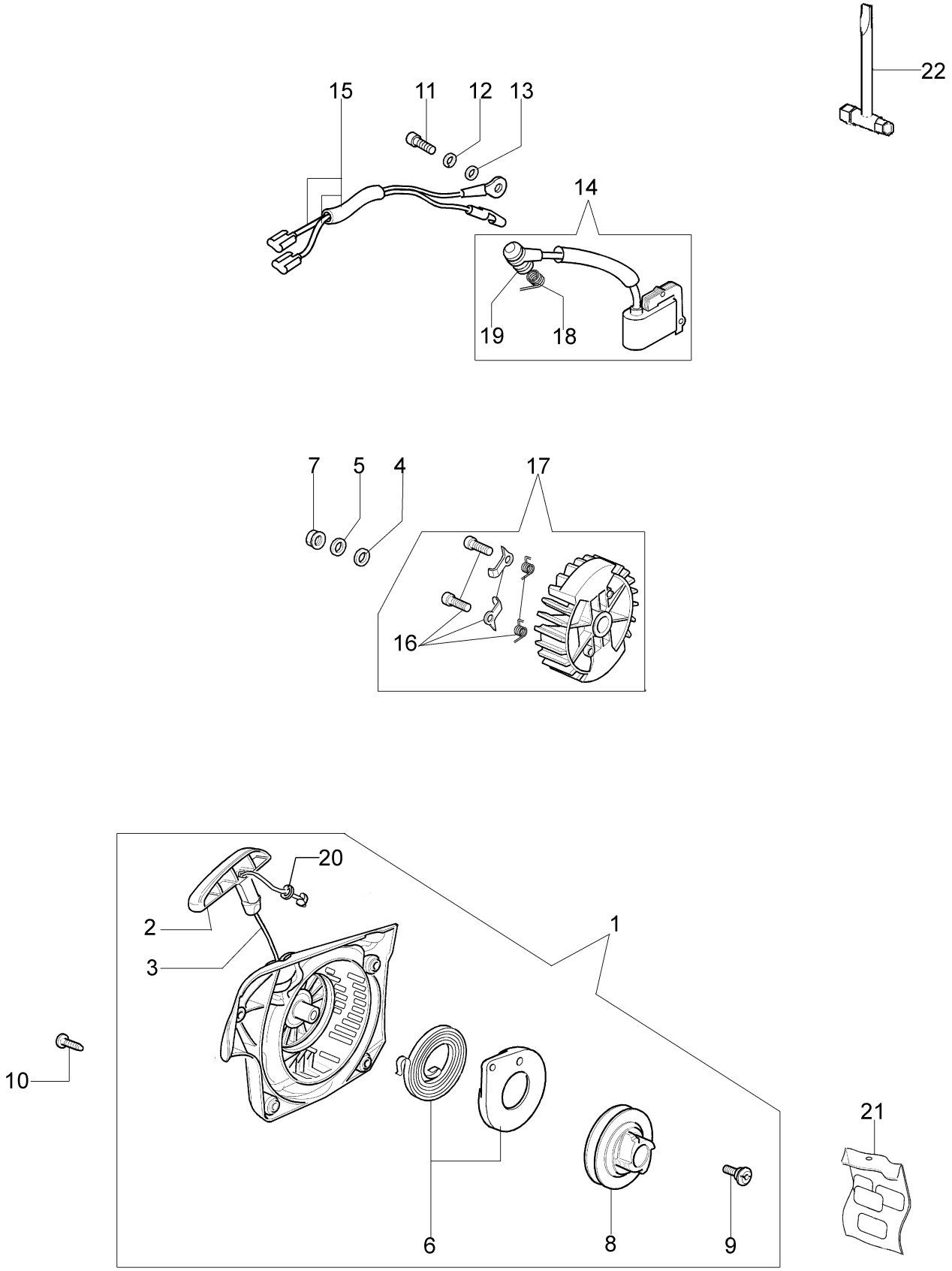
22
15
11
12
13
14
19
18
7
5
4
17
16
20
2
3
1
10
21
6
8
9

| Ref.Nu | Qty | Part number | Description | Validity from | Validity till | Notes | Bulletin |
|---|---|---|---|---|---|---|---|
| 1 | 1 | 50230019R | Starter assy | | | | |
| 2 | 1 | 50170017R | Starter handle | | | | |
| 3 | 1 | 50070123R | Starter rope | | | | |
| 4 | 1 | 005000361 | Washer | | | | |
| 5 | 1 | 3833080 | Washer | | | | |
| 6 | 1 | 50050073R | Spring | | | | |
| 7 | 1 | 004000142 | Nut | | | | |
| 8 | 1 | 50230045R | Pulley | | | | |
| 9 | 1 | 50160024 | Screw | | | | |
| 10 | 4 | 3960115R | Screw | | | | |
| 11 | 2 | 3960075R | Screw | | | | |
| 12 | 2 | 006000315R | Washer | | | | |
| 13 | 2 | 3916004R | Washer | | | | |
| 14 | 1 | 50170144CR | Ignition coil | | | | |
| 15 | 1 | 50170090R | Cable | | | | |
| 16 | 1 | 50072029 | Pawl | | | | |
| 17 | 1 | 50170015R | Flywheel | | | | |
| 18 | 1 | 50050127 | Spring | | | | |
| 19 | 1 | 50050126 | Spark plug cap | | | | |
| 20 | 1 | 006000829 | Washer | | | | |
| 21 | 1 | 50232013 | Labels kit | | | | |
| 22 | 1 | 2304017 | Wrench 13x16 | | | | |

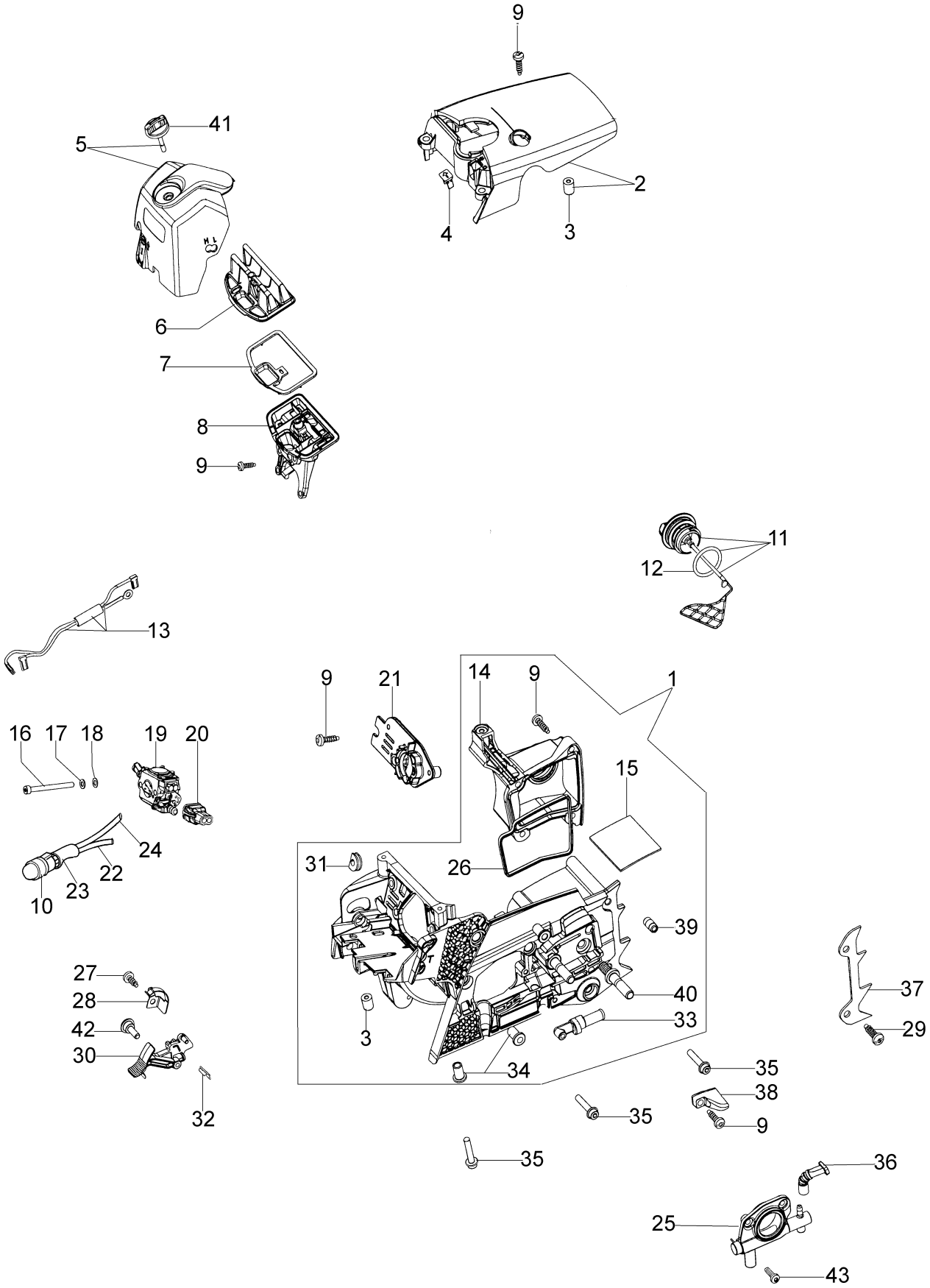
9
41
5
2
4
3
6
7
8
9
11
12
13
9
21
14
9
1
16
17
18
19
20
15
24
31
26
22
23
10
39
27
37
28
40
42
33
29
30
3
34
35
38
32
35
9
35
36
25
43

| Ref.Nu | Qty | Part number | Description | Validity from | Validity till | Notes | Bulletin |
|---|---|---|---|---|---|---|---|
| 1 | 1 | 50232016AR | Crankcase | | | | |
| 2 | 1 | 50232006AR | Cover | | | | |
| 3 | 2 | 50070126R | Spacer | | | | |
| 4 | 1 | 50170032R | Deflector | | | | |
| 5 | 1 | 50232008 | Air filter cover | | | | |
| 6 | 1 | 50230036R | Air filter | | | | |
| 7 | 1 | 50230038R | Gasket | | | | |
| 8 | 1 | 50230068R | Filter support | | | | |
| 9 | 8 | 3960115R | Screw | | | | |
| 10 | 1 | 2318817R | Air purge | | | | |
| 11 | 1 | 50052005R | Tank cap | | | | |
| 12 | 1 | 3049047R | O-ring | | | | |
| 13 | 1 | 50170090R | Cable | | | | |
| 14 | 1 | 50230009R | Cover | | | | |
| 15 | 1 | 50170033R | Guard | | | | |
| 16 | 2 | 3891066R | Screw | | | | |
| 17 | 2 | 3916005R | Washer | | | | |
| 18 | 2 | 3833073R | Washer | | | | |
| 19 | 1 | 2318755DR | Carburetor WT-780F | | | | |
| 20 | 1 | 50170150R | Screw guide | | | | |
| 21 | 1 | 50230061AR | Support | | | | |
| 22 | 1 | 50060014R | Tube | | | | |
| 23 | 1 | 50170121R | Sheath | | | | |
| 24 | 1 | 50170224R | Tube | | | | |
| 25 | 1 | 50170051AR | Oil pump | | | | |
| 26 | 1 | 50210004R | Gasket | | | | |
| 27 | 1 | 3960070AR | Screw | | | | |
| 28 | 1 | 50170061R | Spring | | | | |
| 29 | 2 | 3960099R | Screw | | | | |
| 30 | 1 | 50170060AR | Lever | | | | |
| 31 | 1 | 005000347A | Grommet | | | | |
| 32 | 1 | 50170062R | Plate | | | | |
| 33 | 1 | 50170149R | Oil filter | | | | |
| 34 | 5 | 50050067 | Spacer | | | | |
| 35 | 5 | 3860097R | Screw | | | | |
| 36 | 1 | 50050049R | Tube | | | | |
| 37 | 1 | 50210002R | Spike | | | | |
| 38 | 1 | 094600369R | Guard | | | | |
| 39 | 1 | 097000229R | Breather valve | | | | |
| 40 | 2 | 50050052R | Stud | | | | |
| 41 | 1 | 50210034R | Knob | | | | |
| 42 | 1 | 50160024 | Screw | | | | |
| 43 | 2 | 3960074 | Screw | | | | |

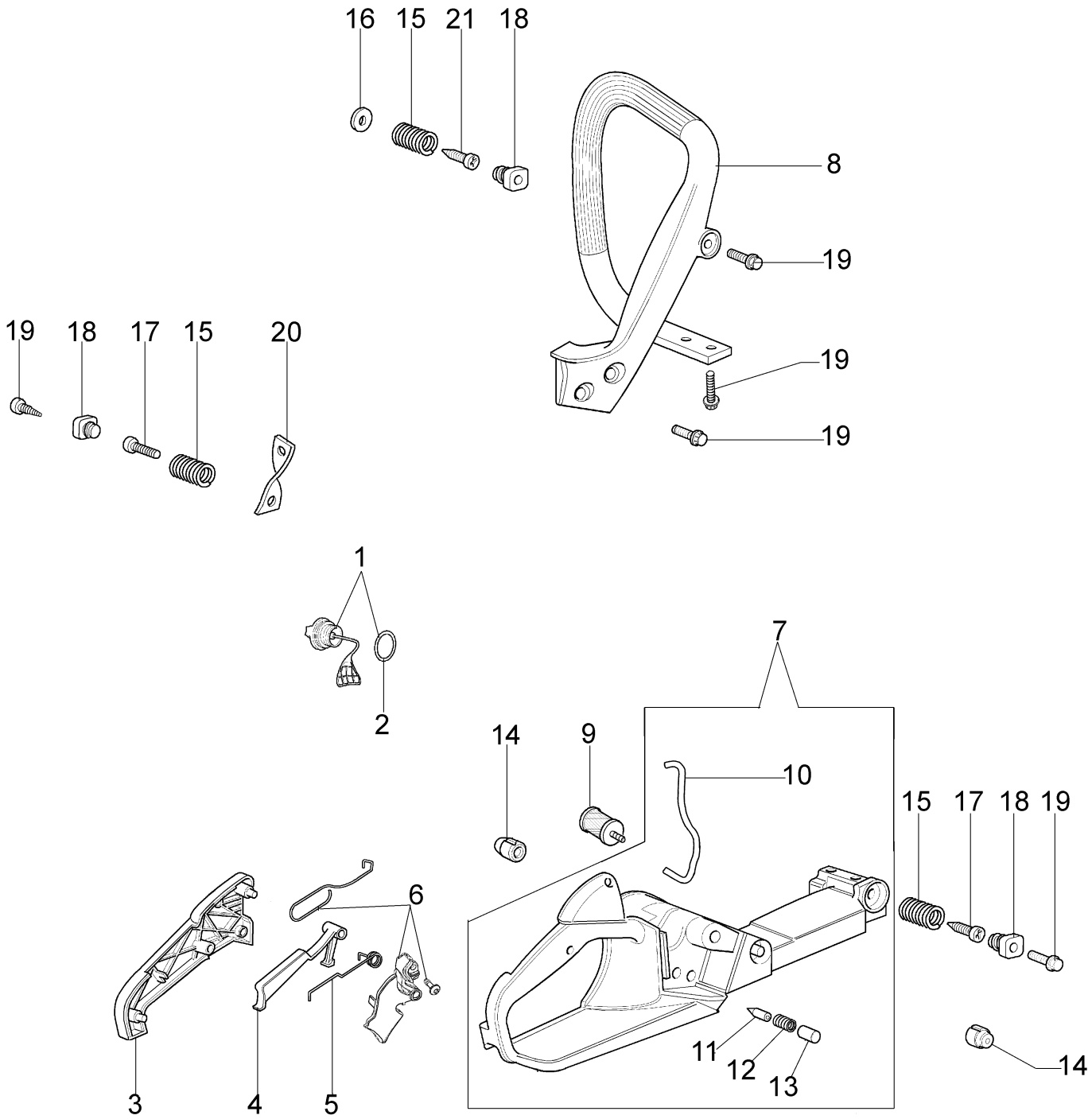
16
15
21
18
8
19
19
19
19
18
17
15
20
1
2
7
14
9
10
15
17
18
19
6
11
12
13
14
3
4
5

| Ref.Nu | Qty | Part number | Description | Validity from | Validity till | Notes | Bulletin |
|---|---|---|---|---|---|---|---|
| 1 | 1 | 50052005R | Tank cap | | | | |
| 2 | 1 | 3049047R | O-ring | | | | |
| 3 | 1 | 50170024R | Cover | | | | |
| 4 | 1 | 50050046AR | Lever | | | | |
| 5 | 1 | 097000028R | Spring | | | | |
| 6 | 1 | 50170248A | Throttle kit | | | | |
| 7 | 1 | 50172007AR | Tank | | | | |
| 8 | 1 | 50170026R | Handle | | | | |
| 9 | 1 | 094600450R | Fuel filter | | | | |
| 10 | 1 | 50170152R | Tube | | | | |
| 11 | 1 | 094500577AR | Breather valve | | | | |
| 12 | 1 | 094500575R | Spring | | | | |
| 13 | 1 | 50050071R | Breather valve | | | | |
| 14 | 2 | 50010061R | AV-mount | | | | |
| 15 | 3 | 50050047AR | Spring | | | | |
| 16 | 1 | 3918010R | Washer | | | | |
| 17 | 2 | 3960115R | Screw | | | | |
| 18 | 3 | 50170034R | Support | | | | |
| 19 | 7 | 3960099R | Screw | | | | |
| 20 | 1 | 50050123R | Strap | | | | |
| 21 | 1 | 3960073R | Screw | | | | |

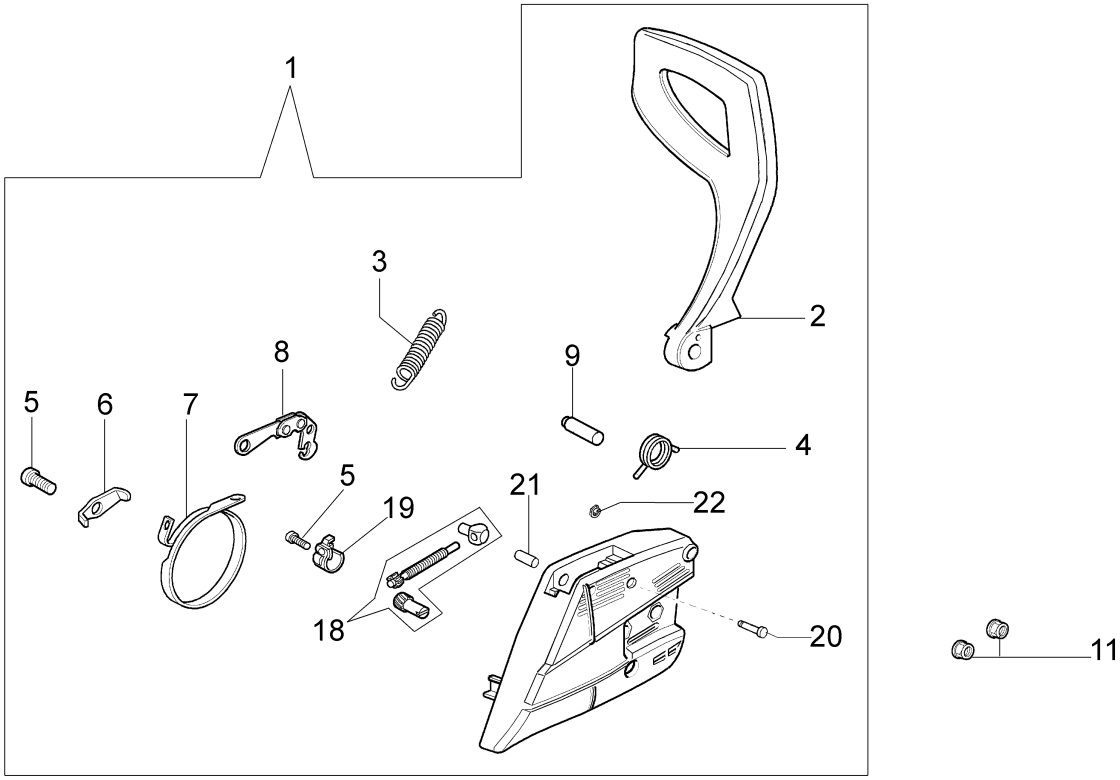
1
2
3
4
5
6
7
8
9
5
19
21
22
18
20
11

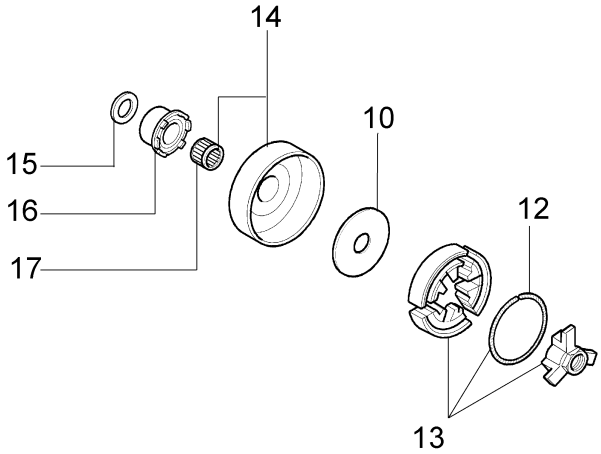
14
10
15
16
17
12
13

| Ref.Nu | Qty | Part number | Description | Validity from | Validity till | Notes | Bulletin |
|---|---|---|---|---|---|---|---|
| 1 | 1 | 50170039R | Chain cover assy | | | | |
| 2 | 1 | 50170040R | Guard | | | | |
| 3 | 1 | 095000219AR | Spring | | | | |
| 4 | 1 | 50010088AR | Spring | | | | |
| 5 | 2 | 3960070AR | Screw | | | | |
| 6 | 1 | 50050125R | Plate | | | | |
| 7 | 1 | 50050039R | Brake band | | | | |
| 8 | 1 | 097000146 | Lever | | | | |
| 9 | 1 | 50050064R | Pin | | | | |
| 10 | 1 | 004000352R | Washer | | | | |
| 11 | 2 | 50010148R | Nut | | | | |
| 12 | 1 | 094500029 | Spring | | | | |
| 13 | 1 | 094000129AR | Clutch | | | | |
| 14 | 1 | 50060033A | Chain sprocket .325 | | | | |
| 15 | 1 | 004400285 | Washer | | | | |
| 16 | 1 | 50060008R | Worm gear .325 | | | | |
| 17 | 1 | 50030372 | Roller cage | | | | |
| 18 | 1 | 50162017A | Chain tensioner kit | | | | |
| 19 | 1 | 50170044R | Cover | | | | |
| 20 | 1 | 097000106R | Plug | | | | |
| 21 | 1 | 50050066 | Plug | | | | |
| 22 | 1 | 3026003 | Ring | | | | |

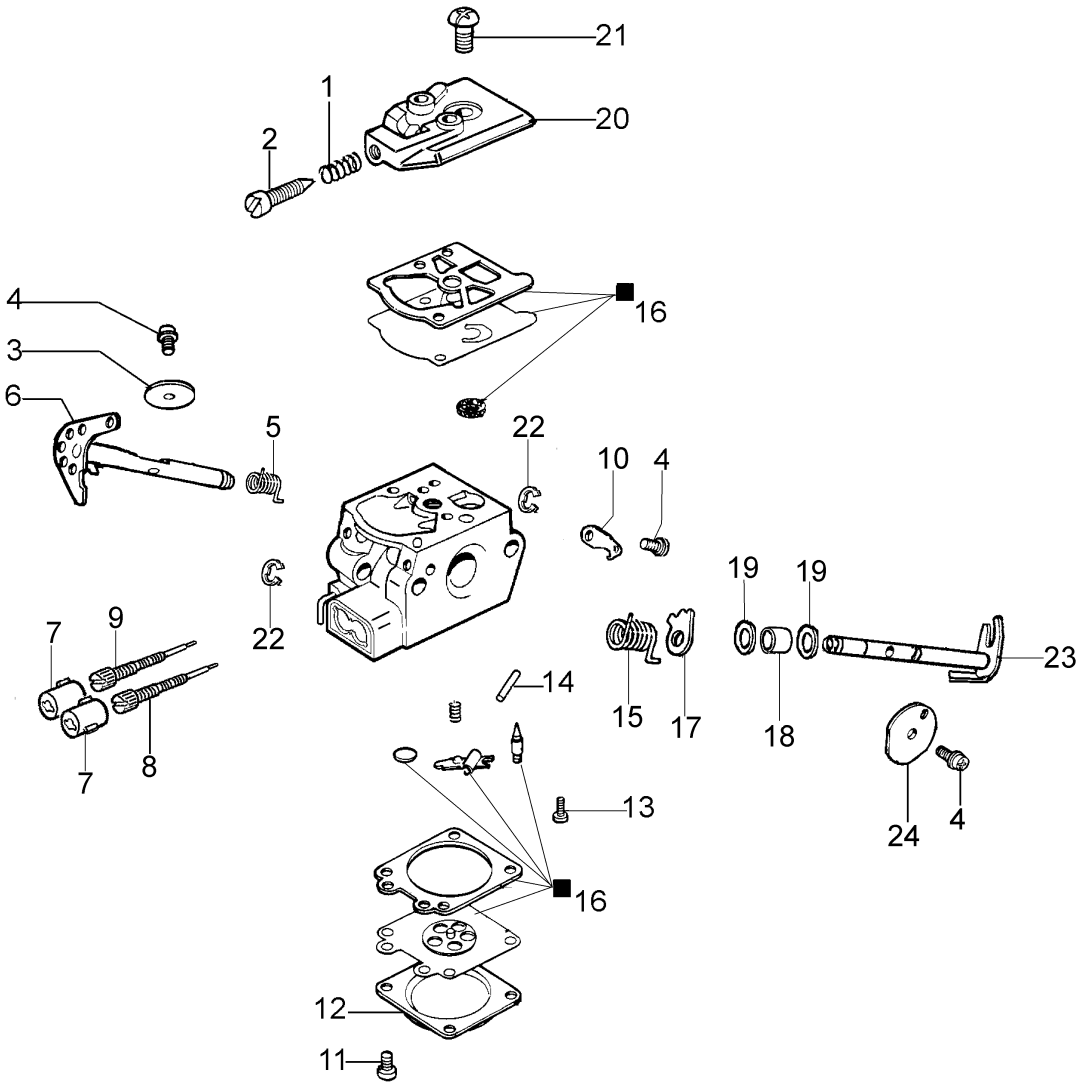


16 ■ KIT RIPARAZIONE
REPAIR KIT

| Ref.Nu | Qty | Part number | Description | Validity from | Validity till | Notes | Bulletin |
|---|---|---|---|---|---|---|---|
| 1 | 1 | 094600148 | Spring | | | | |
| 2 | 1 | 074000240 | Adjust. screw | | | | |
| 3 | 1 | 095000141 | Shutter | | | | |
| 4 | 3 | 50010141 | Screw | | | | |
| 5 | 1 | 094600208 | Spring | | | | |
| 6 | 1 | 2318753 | Shaft | | | | |
| 7 | 2 | 2318867R | Caps-lock | | | | |
| 8 | 1 | 2318837 | Adjust. screw | | | | |
| 9 | 1 | 2318893 | Screw L | | | | |
| 10 | 1 | 2318743 | Throttle lever | | | | |
| 11 | 4 | 035000162 | Screw | | | | |
| 12 | 1 | 2318191 | Cover | | | | |
| 13 | 1 | 003300202 | Screw | | | | |
| 14 | 1 | 003300201 | Spindle | | | | |
| 15 | 1 | 50050115 | Spring | | | | |
| 16 | 1 | 2318671 | Repair kit | | | | |
| 17 | 1 | 2318742 | Lever | | | | |
| 18 | 1 | 2318751 | Bushing | | | | |
| 19 | 2 | 50010265 | Washer | | | | |
| 20 | 1 | 50050107 | Cover | | | | |
| 21 | 1 | 003300197 | Screw | | | | |
| 22 | 2 | 095000164 | Ring | | | | |
| 23 | 1 | 2318764 | Shaft | | | | |
| 24 | 1 | 094600140 | Shutter | | | | |